A Few Words About Safety

SERVICE INFORMATION

The service and repair information contained in this manual is intended for use by qualified, professional technicians. Attempting service or repairs without the proper training, tools, and equipment could cause injury to you and/or others. It could also damage this Honda product or create an unsafe condition.

This manual describes the proper methods and procedures for performing service, maintenance, and repairs. Some procedures require the use a special tools. Any person who intends to use a replacement part, service procedure, or a tool that is not recommended by Honda must determine the risks to their personal safety and the safe operation of this product.

If you need to replace a part, use Honda Genuine parts with the correct part number or an equivalent part. We strongly recommend that you do not use replacement parts of inferior quality.

For Your Customer's Safety

Proper service and maintenance are essential to the customer's safety and the reliability of this product. Any error or oversight while servicing this product can result in faulty operation, damage to the product, or injury to others.

⚠WARNING

Improper service or repairs can create an unsafe condition that can cause your customer or others to be seriously hurt or killed.

Follow the procedures and precautions in this manual and other service materials carefully.

For Your Safety

Because this manual is intended for the professional service technician, we do not provide warnings about many basic shop safety practices (e.g., Hot parts-wear gloves). If you have not received shop safety training or do not feel confident about your knowledge of safe servicing practices, we recommend that you do not attempt to perform the procedures described in this manual.

Some of the most important general service safety precautions are given below. However, we cannot warn you of every conceivable hazard that can arise in performing service and repair procedures. Only you can decide whether or not you should perform a given task.

⚠WARNING

Failure to properly follow instructions and precautions can cause you to be seriously hurt or killed.

Follow the procedures and precautions in this manual carefully.

Important Safety Precautions

Make sure you have a clear understanding of all basic shop safety practices and that you are wearing appropriate clothing and using safety equipment. When performing any service task, be especially careful of the following:

- Read all of the instructions before you begin, and make sure you have the tools, the replacement or repair parts, and the skills required to perform the tasks safely and completely.
- Protect your eyes by using proper safety glasses, goggles, or face shields anytime you hammer, drill, grind, or work around pressurized air, pressurized liquids, springs, or other stored-energy components. If there is any doubt, put on eye protection.
- Use other protective wear when necessary, for example gloves or safety shoes. Handling hot or sharp parts can cause severe burns or cuts. Before you grab something that looks like it can hurt you, stop and put on gloves.
- Protect yourself and others whenever you have equipment hoisted in the air. Anytime you lift this product with a hoist, make sure that the hoist hook is securely attached to the product.

Make sure the engine is off before you begin any servicing procedures, unless the instruction tells you to do otherwise. This will help eliminate several potential hazards:

- Carbon monoxide poisoning from engine exhaust. Be sure there is adequate ventilation whenever you run the engine.
- Burns from hot parts. Let the engine and exhaust system cool before working in those areas.
- Injury from moving parts. If the instruction tells you to run the engine, be sure your hands, fingers and clothing are out of the way.

Gasoline vapors and hydrogen gasses from batteries are explosive. To reduce the possibility of a fire or explosion, be careful when working around gasoline or batteries.

- Use only a nonflammable solvent, not gasoline, to clean parts.
- Never store gasoline in an open container.
- Keep all cigarettes, sparks, and flames away from the battery and all fuel-related parts.

INTRODUCTION

This supplement covers the construction, function, and servicing procedures of the Honda iGX270UT2·iGX390T2/UT2 Engines.
For service information that is not covered in this supplement, please refer to the GX270T2/UT2·GX390RT2/T2/UT2 base shop manuals (part number 62Z5F00Z·62Z5F00).

All information contained in this manual is based on the latest product information available at the time of printing. We reserve the right to make changes at anytime without notice.

As you read this manual, you will find information that is preceded by a NOTICE symbol. The purpose of this message is to help prevent damage to this Honda product, other property, or the environment.

SAFETY MESSAGES

Your safety and the safety of others are very important. To help you make informed decisions, we have provided safety messages and other safety information throughout this manual. Of course, it is not practical or possible to warn you about all the hazards associated with servicing these products. You must use your own good judgement.

You will find important safety information in a variety of forms, including:

- Safety Labels – on the product.
- Safety Messages – preceded by a safety alert symbol ⚠ and one of three signal words, DANGER, WARNING, or CAUTION.

These signal words mean:

⚠DANGER You WILL be KILLED or SERIOUSLY HURT if you don't follow instructions.

⚠WARNING You CAN be KILLED or SERIOUSLY HURT if you don't follow instructions.

⚠CAUTION You CAN be HURT if you don't follow instructions.

- Instructions – how to service these products correctly and safely.

SERVICE PUBLICATION OFFICE

Date of Issue: September 2010

The marked sections contain no changes. They are not covered in this supplement.

SYMBOLS

The symbols used throughout this manual show specific service procedures. If supplementary information is required pertaining to these symbols, it will be explained specifically in the text without the use of the symbols.

NEW	Replace the part(s) with new one(s) before assembly.
OIL	Use the recommend engine oil, unless otherwise specified.
MO OIL	Use molybdenum oil solution (mixture of the engine oil and molybdenum grease in a ratio of 1:1).
GREASE	Use multi-purpose grease (lithium based multi-purpose grease NLGI #2 or equivalent).
LOCK	Apply a locking agent. Use a medium strength locking agent unless otherwise specified.
SEAL	Apply sealant.
ATF	Use automatic transmission fluid.
(○ x ○) (○)	Indicates the diameter, length, and quantity of metric bolts used.
page 1-1	Indicates the reference page.

ITEM	MODEL	
	GX270UT2·GX390UT2/T2	iGX270UT2·iGX390UT2/T2
Fan cover	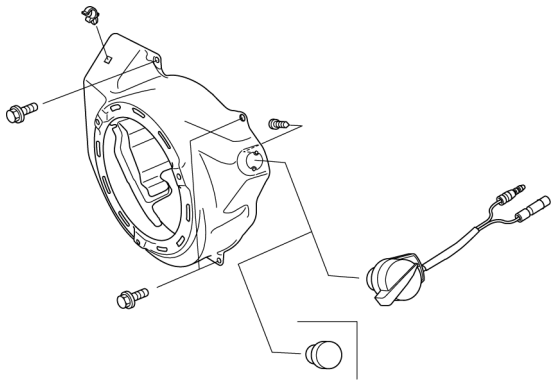	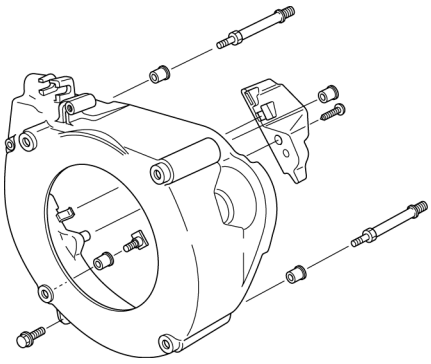
Carburetor	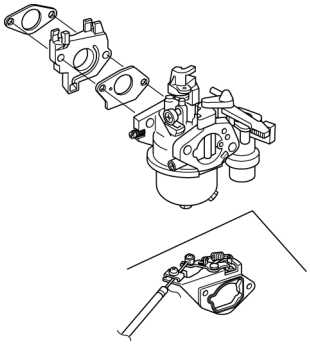	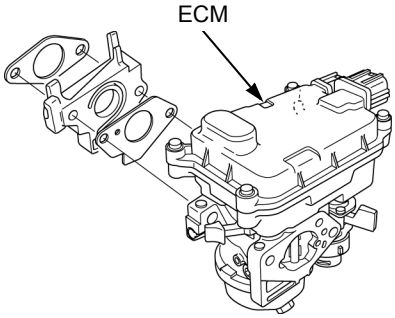
Control base Assy.	MANUAL OPERATION TYPE: 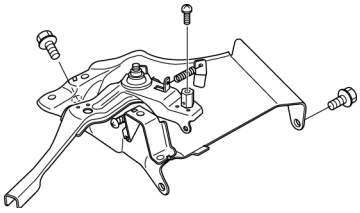 MANUAL OPERATION A TYPE: 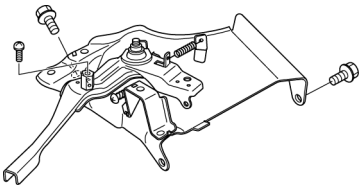 EXCEPT MANUAL OPERATION TYPE: 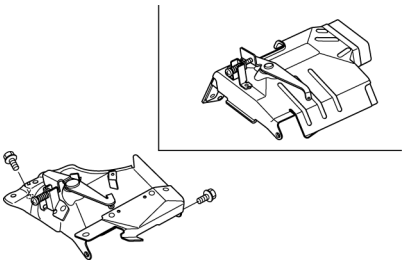	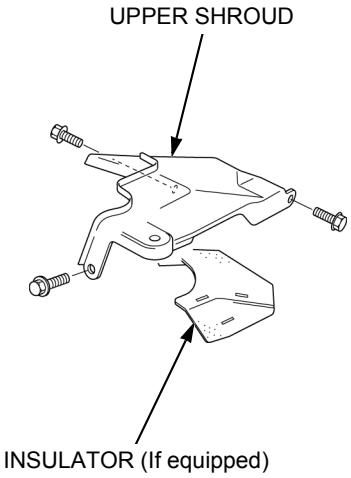

ITEM	MODEL	
	GX270UT2·GX390UT2/T2	iGX270UT2·iGX390UT2/T2
Charge/lamp coil	10 A CHARGE COIL/12 V – 50 W LAMP COIL TYPE: 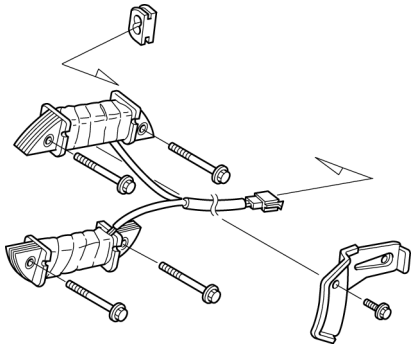	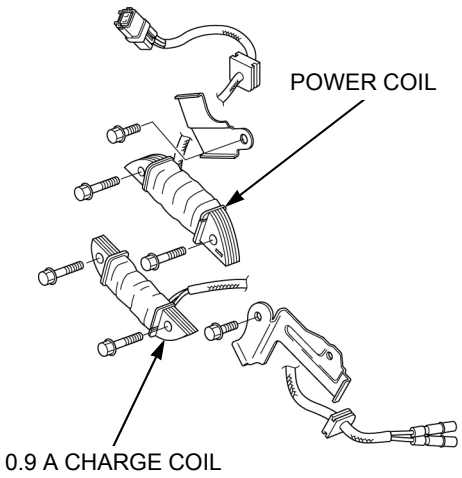
	18 A CHARGE COIL TYPE: 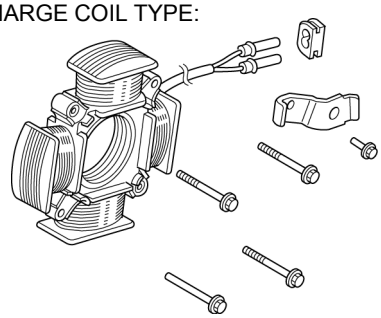	
	1 A/3 A CHARGE COIL TYPE: 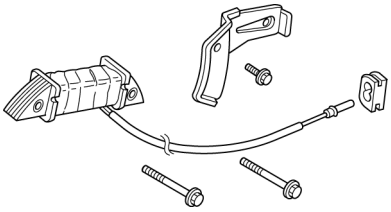	
	12 V – 15 W/12 V – 25 W LAMP COIL TYPE: 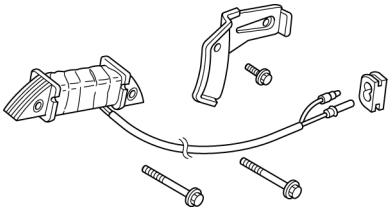	
Governor arm/ governor rod	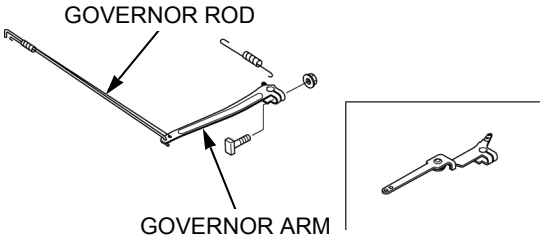	

ITEM	MODEL	
	GX270UT2·GX390UT2/T2	iGX270UT2·iGX390UT2/T2
Engine wire harness	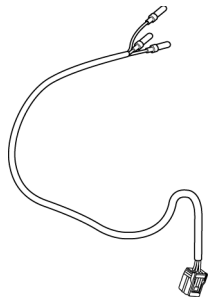	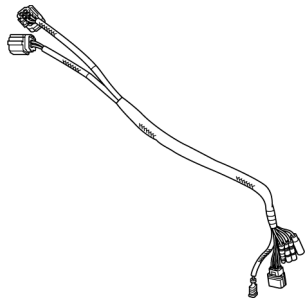
Recoil starter	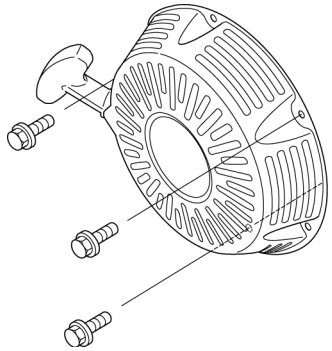	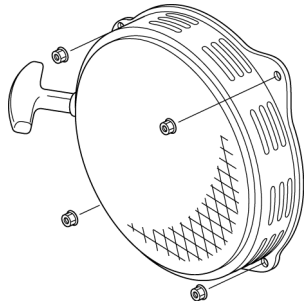
Starter motor	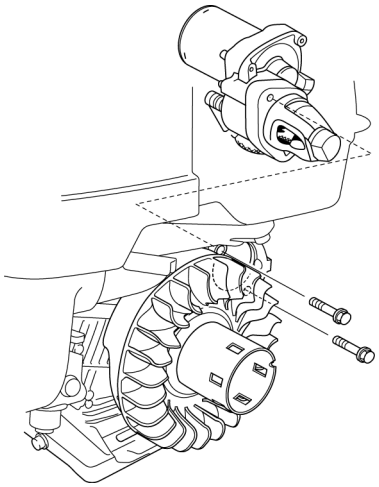	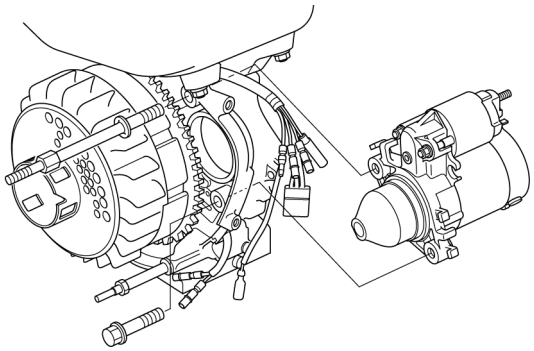
Control box	With circuit protector type 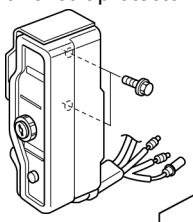 Without circuit protector type 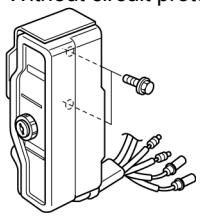	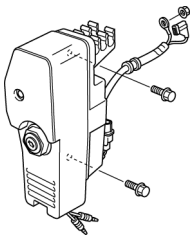

ITEM	MODEL	
	GX270UT2·GX390UT2/T2	iGX270UT2·iGX390UT2/T2
Auto throttle solenoid	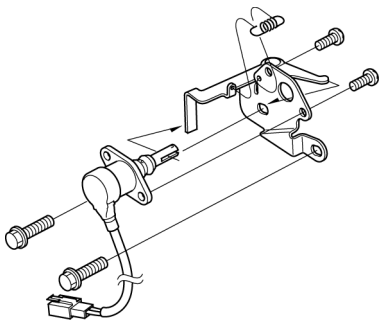	
Case cover packing	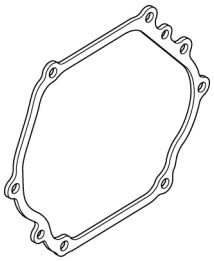	
Crankcase/ oil level switch/ governor arm shaft	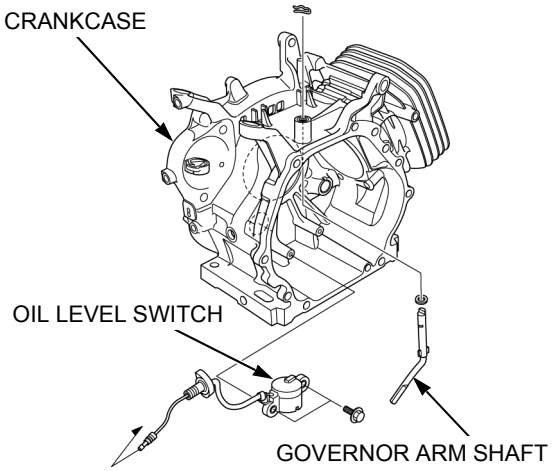	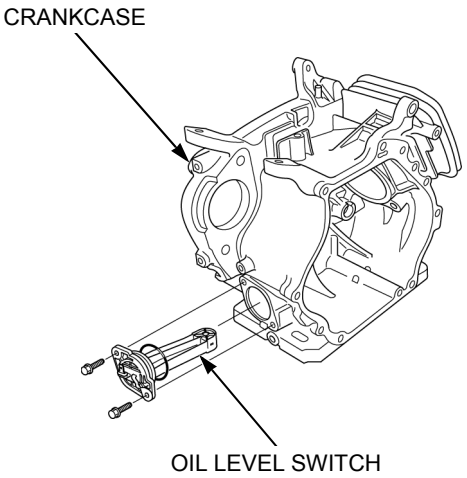
Crankcase cover	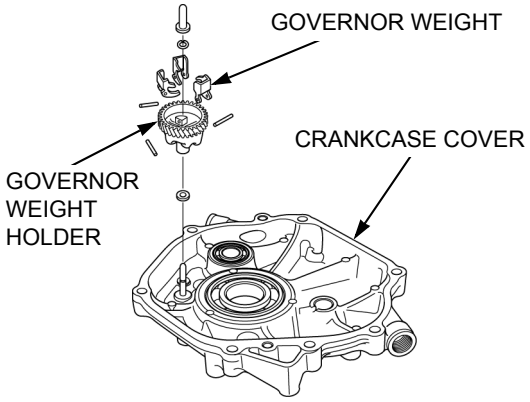	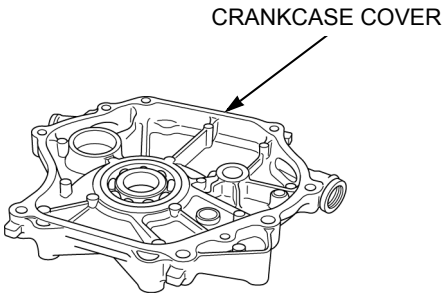

1. SPECIFICATIONS

SERIAL NUMBER LOCATION

The engine serial number (1), description code (2) and type (3) are stamped on the crankcase.

Refer to it when ordering parts or making technical inquiries.

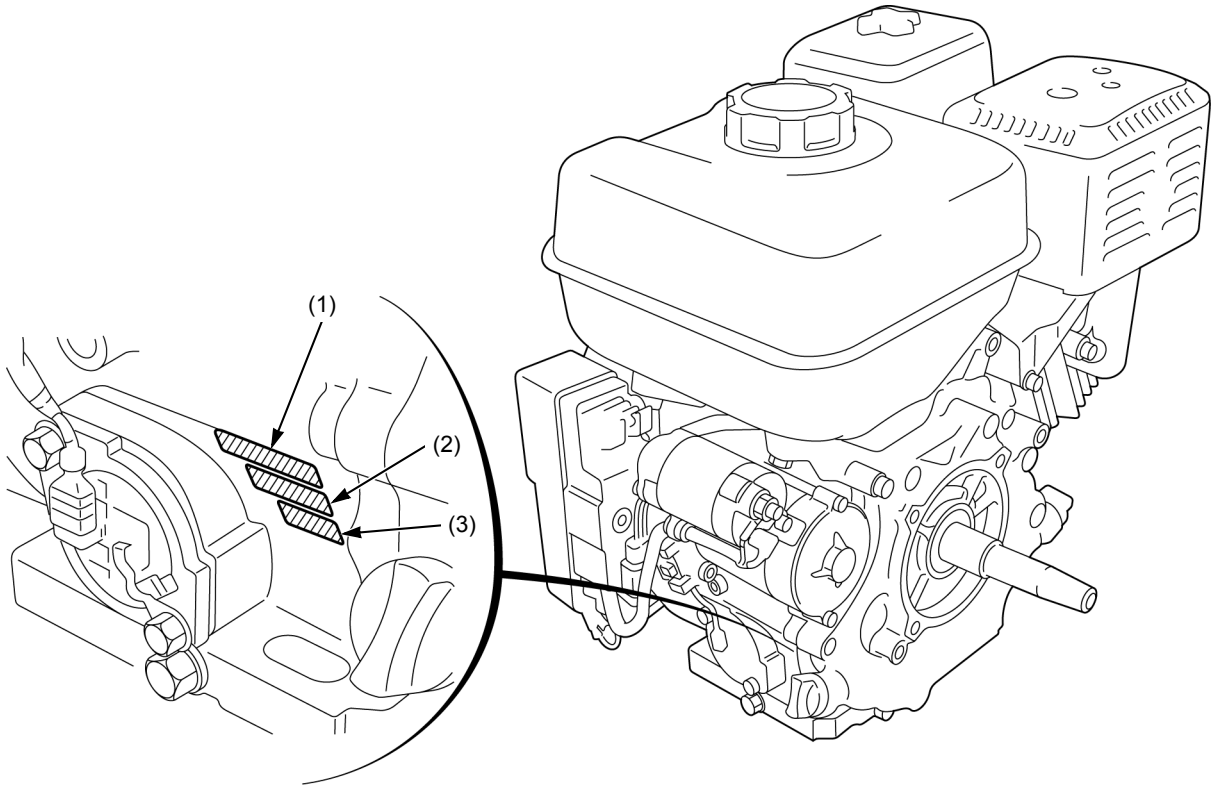

TYPE CODE

Model	GX270UT2	
Type	QZX4	VZX7
P. T. O.	Q type	V type

Model	GX390T2
Type	VZX
P. T. O.	V type

Model	GX390UT2	
Type	VZX7	VZX8
P. T. O.	V type	

DIMENSIONS AND WEIGHTS SPECIFICATIONS

P.T.O. VARIATION

Model		GX270UT2	GX390UT2·GX390T2
Overall length	Q type*	380 mm (15.0 in)	–
	V type*	400 mm (15.7 in)	425 mm (16.7 in)
Overall width	Q type*	462 mm (18.2 in)	–
	V type*	462 mm (18.2 in)	484 mm (19.1 in)
Overall height	Q type*	422 mm (16.6 in)	–
	V type*	422 mm (16.6 in)	448 mm (17.6 in)
Dry weight	Q type*	29.4 kg (64.8 lbs)	–
	V type*	29.4 kg (64.8 lbs)	36.4 kg (80.2 lbs)
Operating weight	Q type*	34.2 kg (75.4 lbs)	–
	V type*	34.2 kg (75.4 lbs)	41.7 kg (91.9 lbs)

*: P. T. O. type (page 1-2).

ENGINE SPECIFICATIONS

Model	GX270UT2	GX390UT2	GX390T2
Description code	GCBGT	GCBCT	GCBDT
Type	4 stroke, overhead valve, single cylinder, inclined by 25°		
Displacement	270 cm^3 (16.5 cu–in)	389 cm^3 (23.7 cu–in)	
Bore x stroke	77.0 x 58.0 mm (3.0 x 2.3 in)	88.0 x 64.0 mm (3.5 x 2.5 in)	
Net power (SAE J1349)*1	6.3 kW (8.4 HP) / 3,600 min^{-1} (rpm)	8.7 kW (11.7 HP) / 3,600 min^{-1} (rpm)	
Continuous rated power	5.1 kW (6.8 HP) / 3,600 min^{-1} (rpm)	7.0 kW (9.4 HP) / 3,600 min^{-1} (rpm)	
Maximum net torque (SAE J1349)*1	19.1 N·m (1.95 kgf·m, 14.1 lbf·ft) / 2,500 min^{-1} (rpm)	26.5 N·m (2.7 kgf·m, 19.5 lbf·ft)/ 2,500 min^{-1} (rpm)	
Compression ratio	8.5 : 1	8.2 : 1	
Fuel consumption (at continuous rated power)	2.4 Liters (0.63 US gal, 0.53 Imp gal)/h	3.5 Liters (0.92 US gal, 0.77 Imp gal) / h	
Ignition system	C.D.I.(Capacitor Discharge Ignition) type magneto ignition		
Ignition timing	B.T.D.C. 10° / 1,400 min^{-1} (rpm)		
Spark advancer performance	B.T.D.C. 10° – 20°	B.T.D.C. 10° – 22°	
Spark plug	BPR6ES (NGK) / W20EPR-U (DENSO)		
Lubrication system	Forced splash		
Oil capacity	1.1 Liters (1.16 US qt, 0.97 Imp qt)		
Recommended oil	SAE 10W-30 API service classification SE or later		
Cooling system	Forced air		
Starting system	Recoil and Starter motor		
Stopping system	Ignition primary circuit open		
Carburetor	Horizontal type, butterfly valve		
Air cleaner	Dual element type		
Governor	STR (Self Tuning Regulator) governor		
Breather system	Reed valve type		
Fuel used	Unleaded gasoline with a pump octane rating 86 or higher		

*1: The power rating of the engine indicated in this document is the net power output tested on a production engine for the engine model and measured in accordance with SAE J1349 at 3,600 min^{-1} (rpm) (net power) and at 2,500 min^{-1} (rpm) (maximum net torque). Mass production engines may vary from this value. Actual power output for the engine installed in the final machine will vary depending on numerous factors, including the operating speed of the engine in application, environmental conditions, maintenance, and other variables.

DIMENSIONAL DRAWINGS

*: P. T. O. type (page 1-2).

Unit: mm (in)

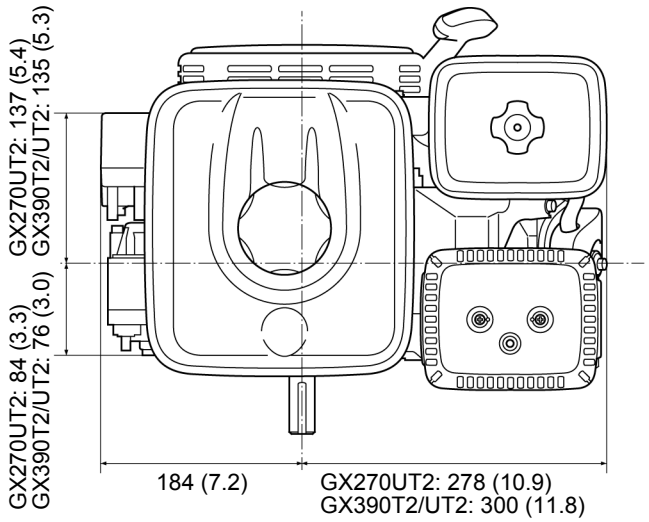

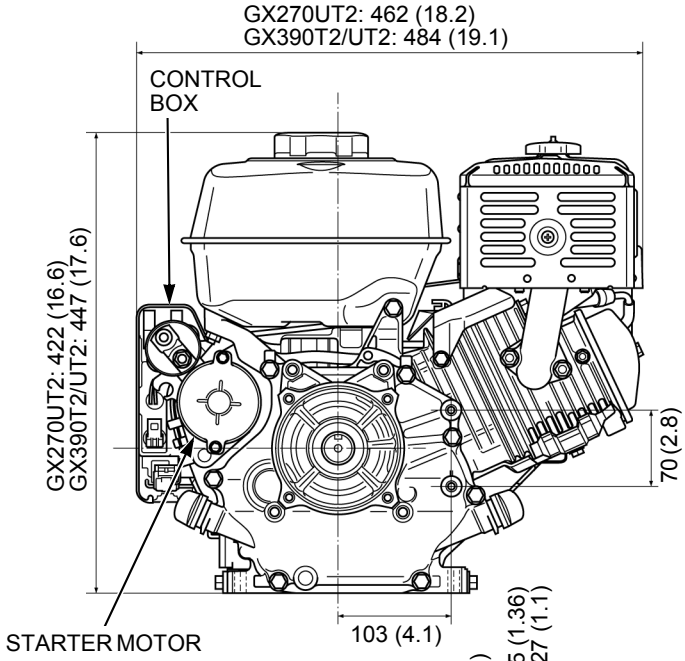

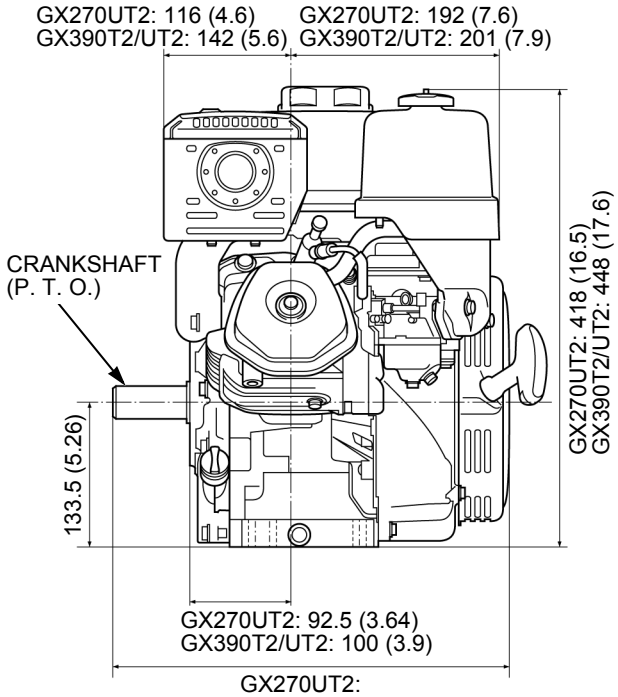

GX270UT2:
* Q: 380 (15.0)
* V: 400 (15.7)

GX390T2/UT2:
* V: 425 (16.7)

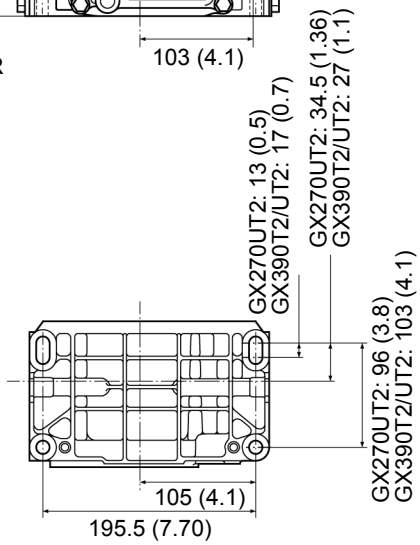

P.T.O. DIMENSIONAL DRAWINGS

*: P. T. O. type (page 1-2).

Q TYPE* (GX270UT2)

Unit: mm (in)

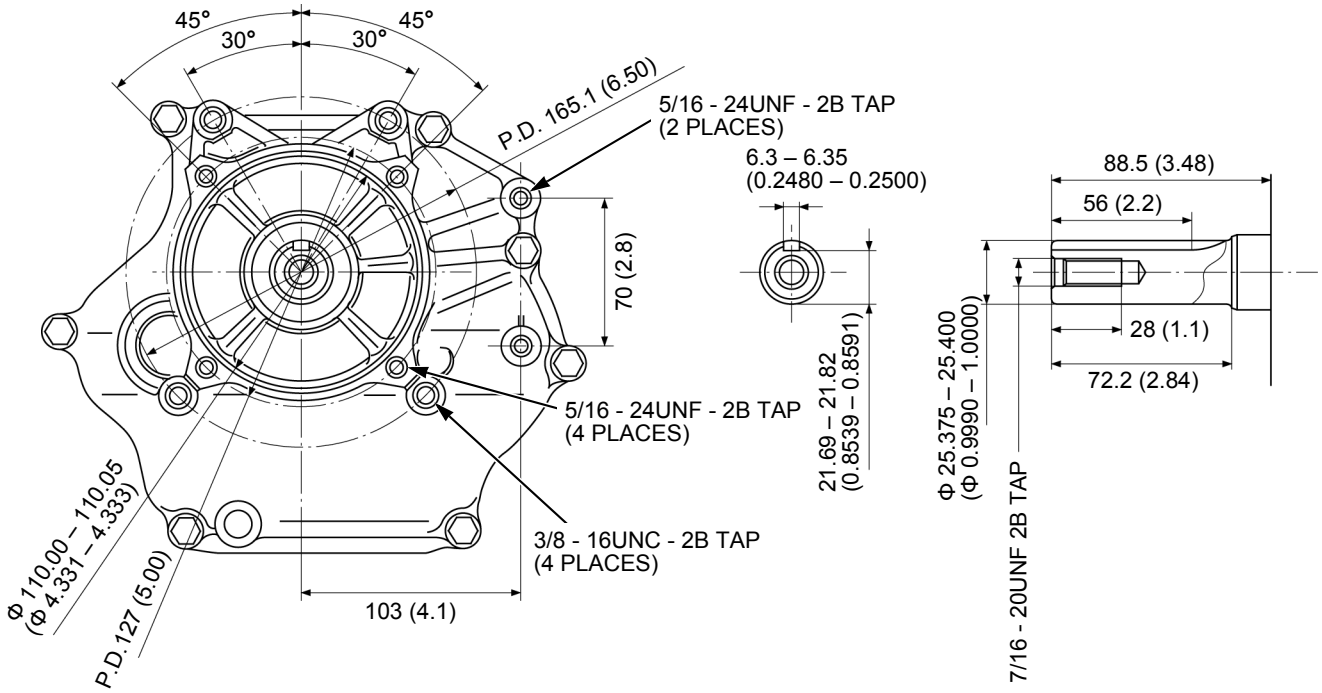

V TYPE*

Unit: mm (in)

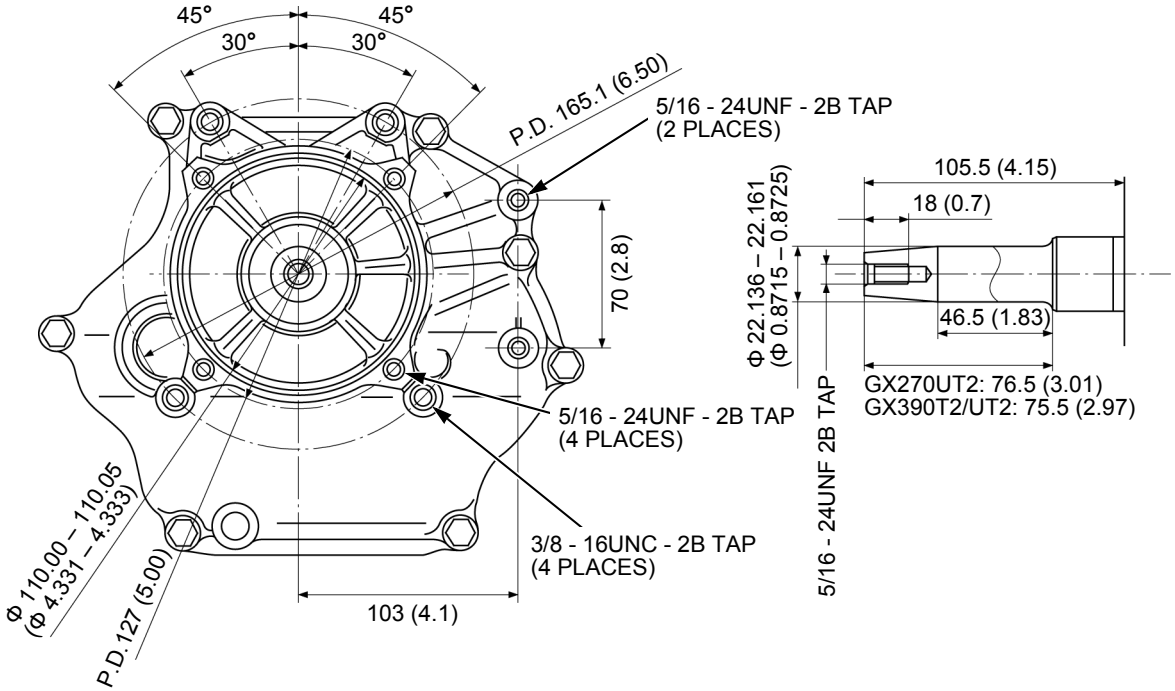

MEMO

2. SERVICE INFORMATION

MAINTENANCE STANDARDS

Unit: mm (in)

Part	Item		Standard	Service limit
Engine	Maximum speed (at no load)		3,600 min^{-1} (rpm)*	–
	Cylinder compression	GX270UT2	1.31 MPa (13.4 kgf/cm^2, 190 psi) / 1,400 min^{-1} (rpm)	–
		GX390T2/UT2	1.29 MPa (13.2 kgf/cm^2, 187 psi) / 1,400 min^{-1} (rpm)	–
Carburetor	Main jet	GX270UT2	BE90A A: #85	–
		GX390T2/UT2	BE92B A: #100	–
	Pilot screw opening	GX270UT2	BE90A A: 1 - 1/2 turns out	–
		GX390T2/UT2	BE92B A: 3 turns out	–
Starter motor	Brush length		10 (0.4)	6 (0.2)
	Mica depth		–	0.2 (0.01)
Charge coil	Resistance	0.9 A	5.1 - 7.7 Ω	–
Power coil	Resistance		2.9 - 4.5 Ω	–

*: This figure is caused by basic program in the ECM. The engine speed is different depending on the program in the ECM.

TORQUE VALUES

ENGINE TORQUE VALUES

Item	Tread Dia. (mm)	Torque values		
		N·m	kgf·m	lbf·ft
Starter motor stud bolt	M10 x 1.25	40	4.1	30
Fan cover stud bolt	M8 x 1.25	23	2.3	17
Combination switch nut	M18 x 1.0	4.9	0.50	3.6
ECM screw/washer	M4 x 0.7	2.1	0.21	1.5
Motor case set screw A/B	M4 x 0.7	2.1	0.21	1.5
Starter motor nut	M8 x 1.25	8.8	0.90	6.5
Jet set screw	M5 x 0.8	0.3	0.03	0.22

LUBRICATION & SEAL POINT

Location	Material	Remarks
Crankcase cover mating surface	Liquid sealant (Threebond® 1207B or equivalent)	

HARNESS AND TUBE ROUTING

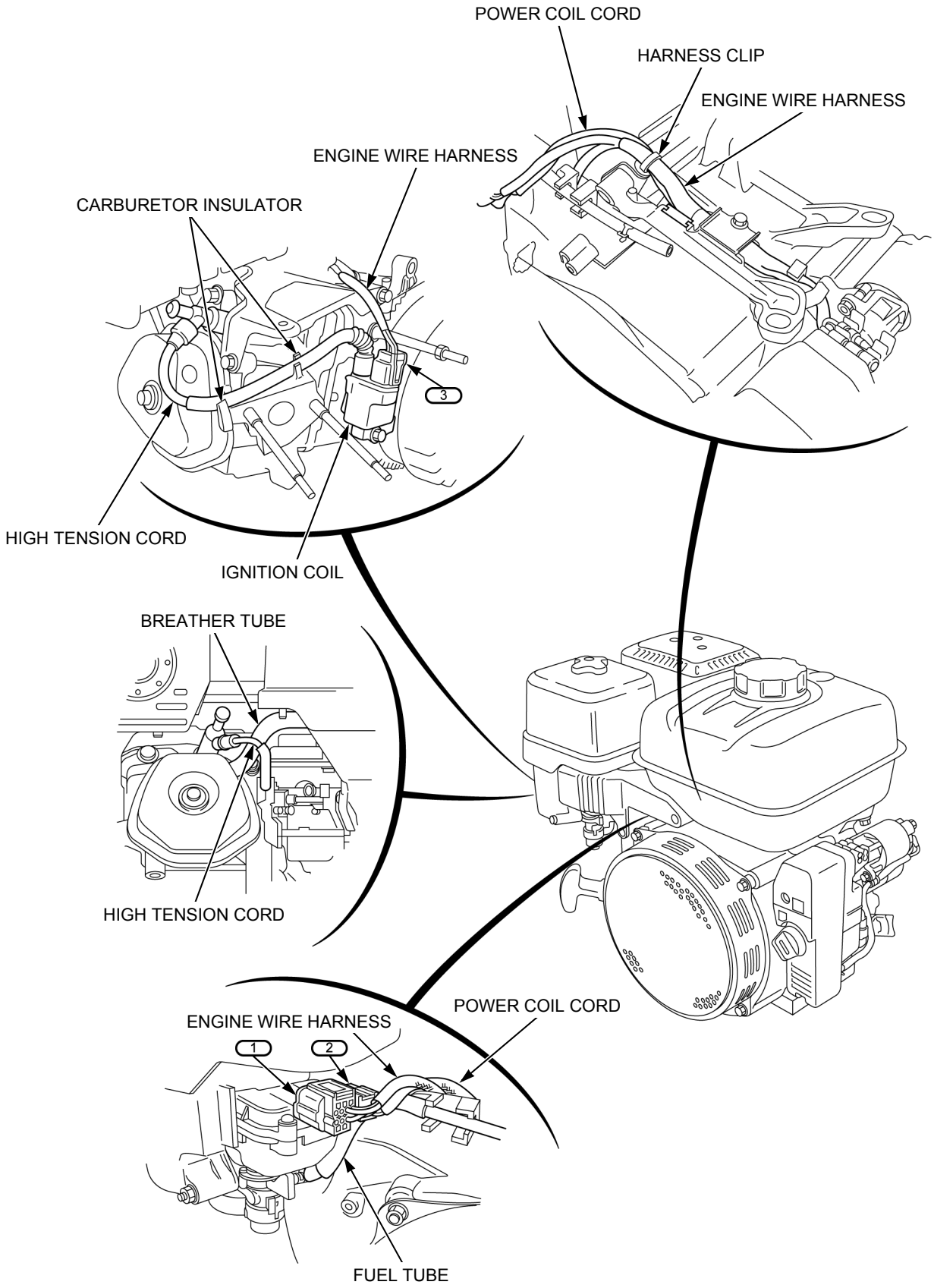

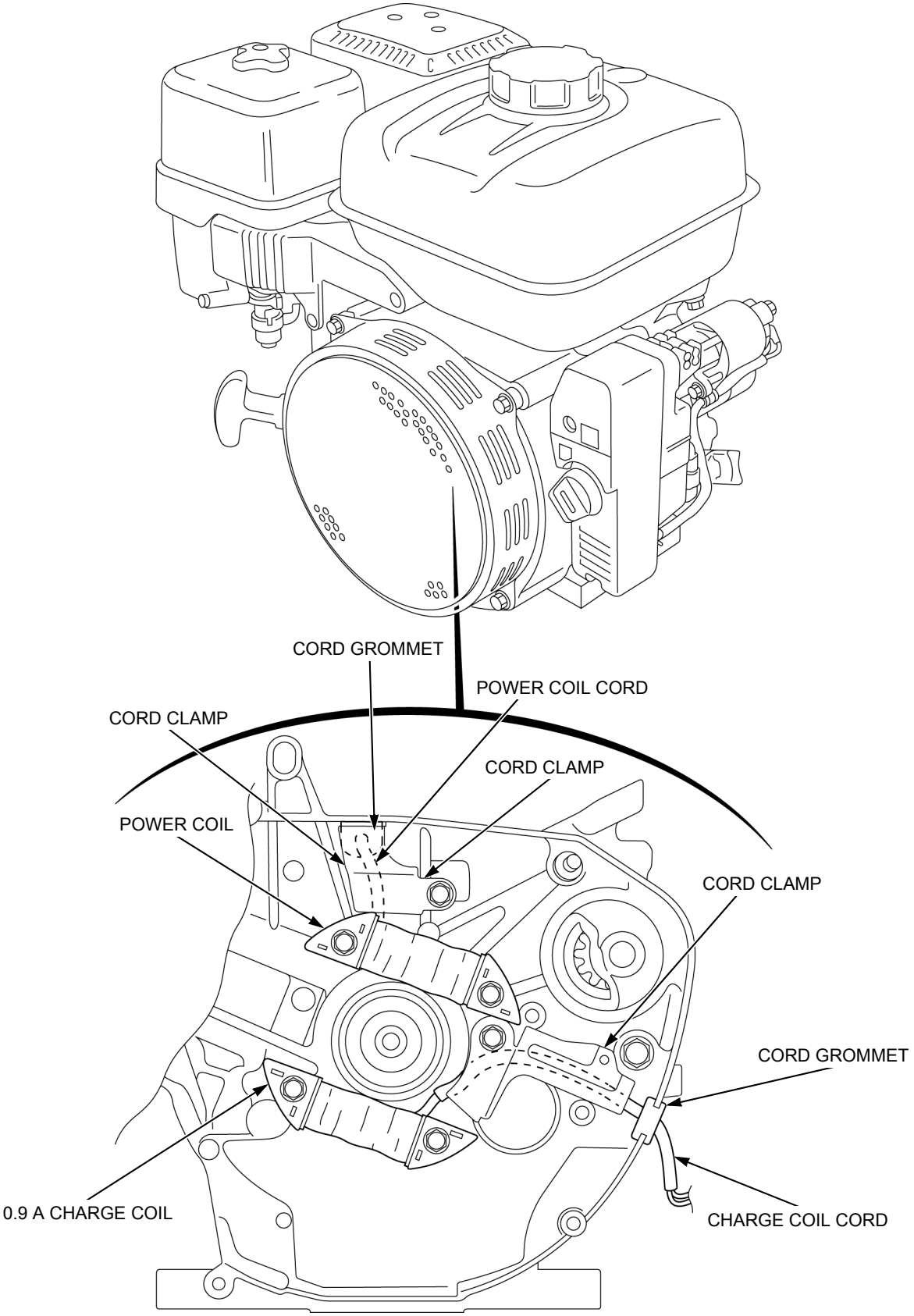
CORD GROMMET
POWER COIL CORD
CORD CLAMP
CORD CLAMP
POWER COIL
CORD CLAMP
CORD GROMMET
0.9 A CHARGE COIL
CHARGE COIL CORD

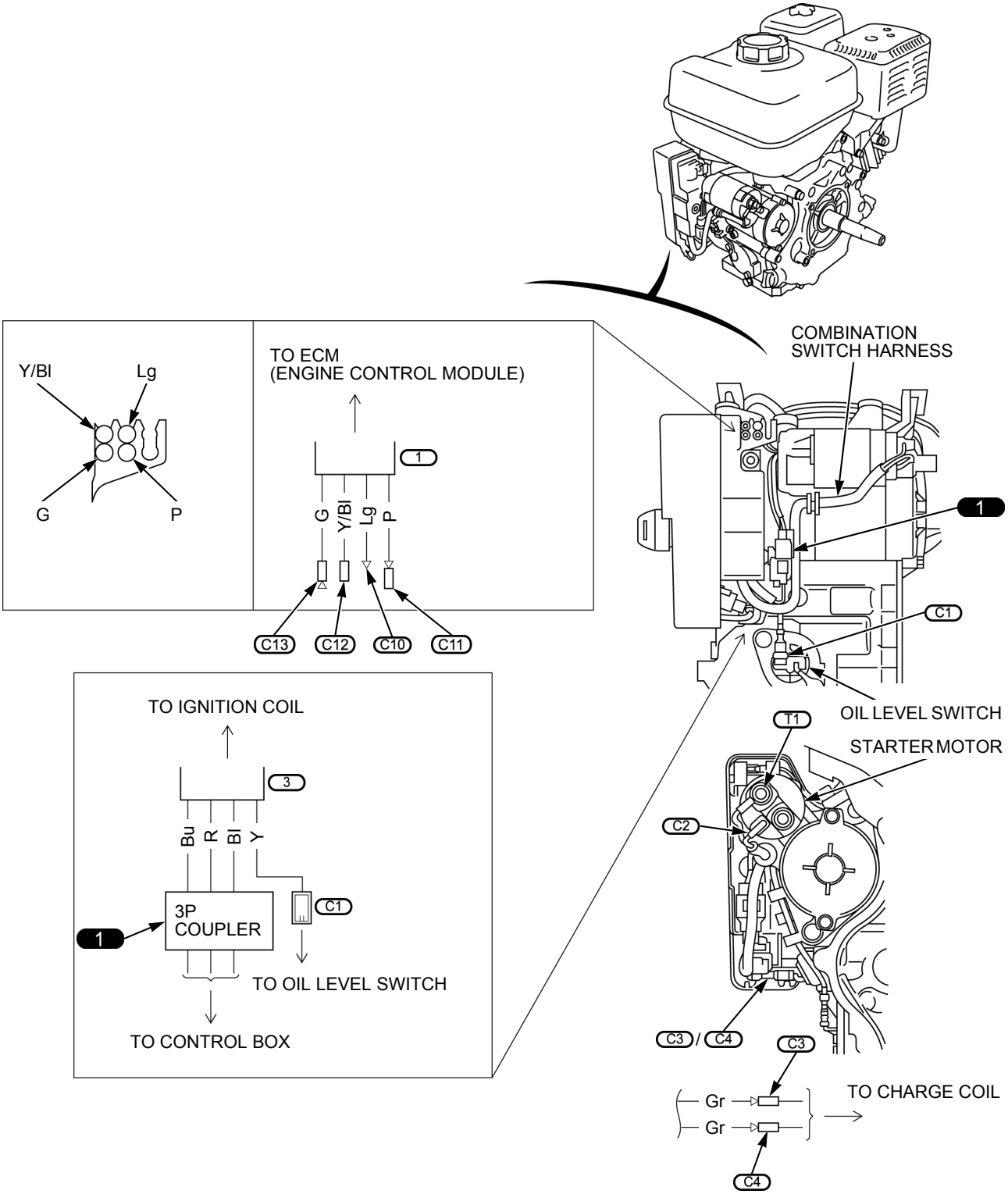
Y/Bl
Lg
G
P
TO ECM
(ENGINE CONTROL MODULE)
1
G
Y/Bl
Lg
P
C13
C12
C10
C11
TO IGNITION COIL
3
Bu
R
Bl
Y
3P
COUPLER
1
C1
TO OIL LEVEL SWITCH
TO CONTROL BOX
COMBINATION
SWITCH HARNESS
1
C1
OIL LEVEL SWITCH
T1
STARTER MOTOR
C2
C3 / C4
C3
Gr
Gr
TO CHARGE COIL
C4

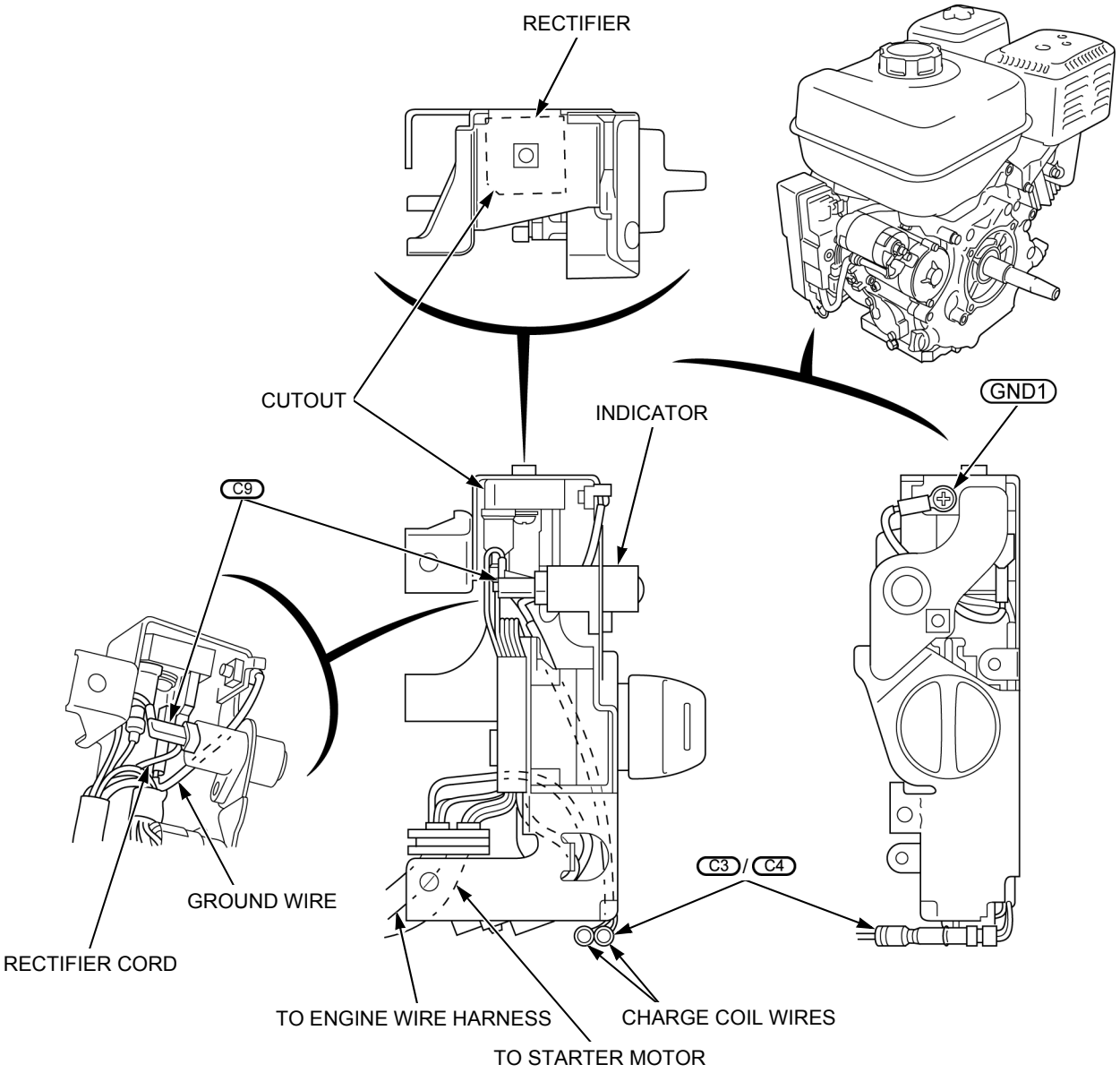
RECTIFIER
CUTOUT
INDICATOR
GND1
C9
GROUND WIRE
RECTIFIER CORD
C3 / C4
TO ENGINE WIRE HARNESS
CHARGE COIL WIRES
TO STARTER MOTOR

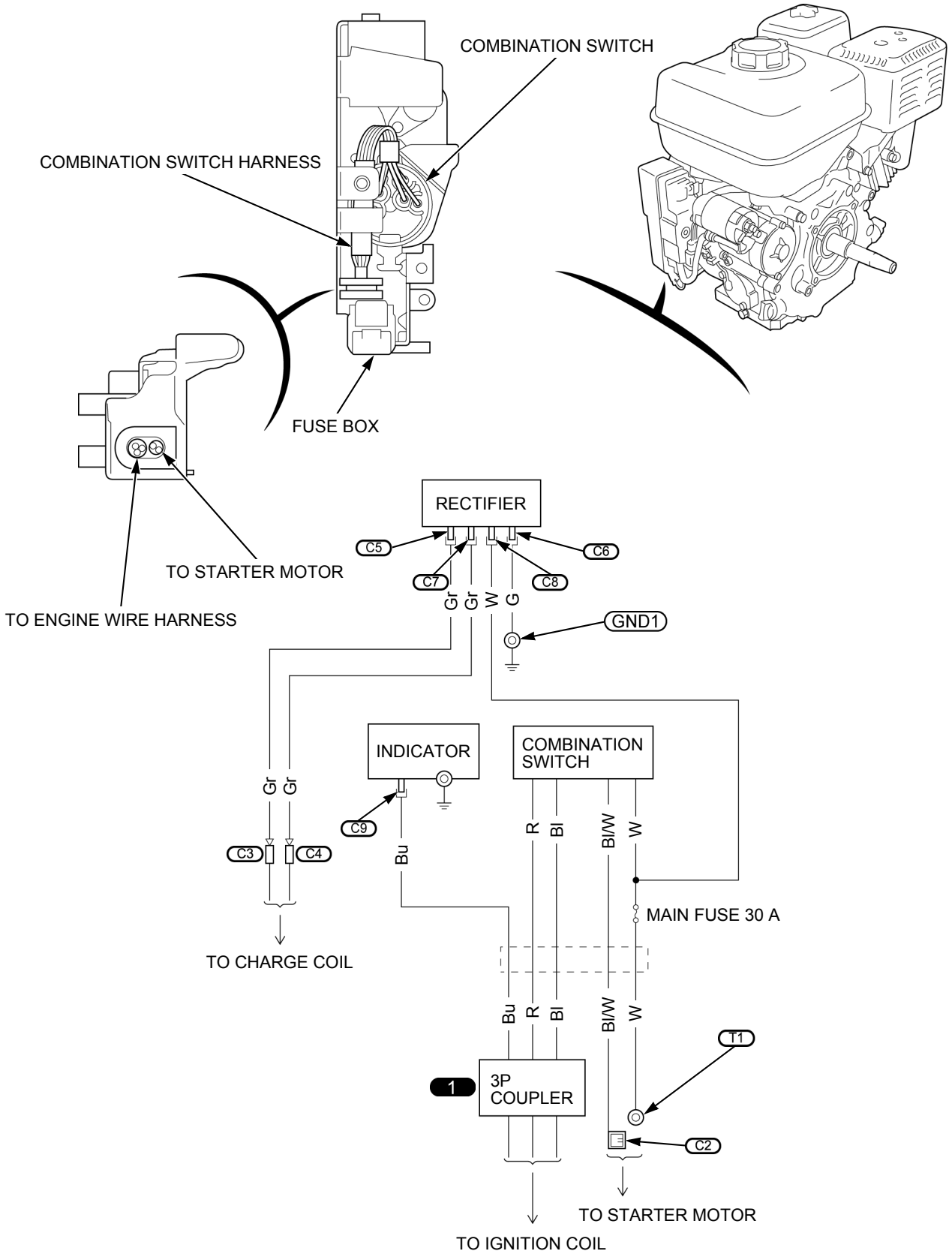
COMBINATION SWITCH
COMBINATION SWITCH HARNESS
FUSE BOX
TO STARTER MOTOR
TO ENGINE WIRE HARNESS
RECTIFIER
C5
C6
C7
C8
Gr
Gr
W
G
GND1
INDICATOR
COMBINATION SWITCH
Gr
Gr
C9
C3
C4
Bu
R
Bl
Bl/W
W
MAIN FUSE 30 A
TO CHARGE COIL
Bu
R
Bl
Bl/W
W
T1
1
3P COUPLER
C2
TO STARTER MOTOR
TO IGNITION COIL

MEMO

3. MAINTENANCE

MAINTENANCE SCHEDULE

ITEM Perform at every indicated month or operating hour interval, whichever comes first.		REGULAR SERVICE PERIOD (2)					Refer to page
		Each use	First month or 20 hrs.	Every 3 months or 50 hrs.	Every 6 months or 100 hrs.	Every year or 300 hrs.	
Engine oil	Check level	○					3-3*
	Change		○		○		
Air cleaner	Check	○					3-4*
	Clean			○ (1)			
	Replace					○	
Sediment cup	Clean				○		3-6*
Spark plug	Check–adjust				○		3-7*
	Replace					○	3-8*
Spark arrester (Applicable types)	Check–clean				○		3-8*
Valve clearance	Check–adjust					○	3-3
Combustion chamber	Clean	After every 1,000 hours					3-4
Fuel tank and filter	Clean				○		3-12*
Fuel tube	Check	Every 2 years (Replace if necessary)					3-5

(1) Service more frequently when used in dusty areas.

(2) For commercial use, log hours of operation to determine proper maintenance intervals.

(*) Refer to page of base shop manual (GX390RT2/T2/UT2: 62Z5F00)

VALVE CLEARANCE CHECK/ ADJUSTMENT

Remove the head cover bolt (1), the head cover (2), and the head cover packing (3).

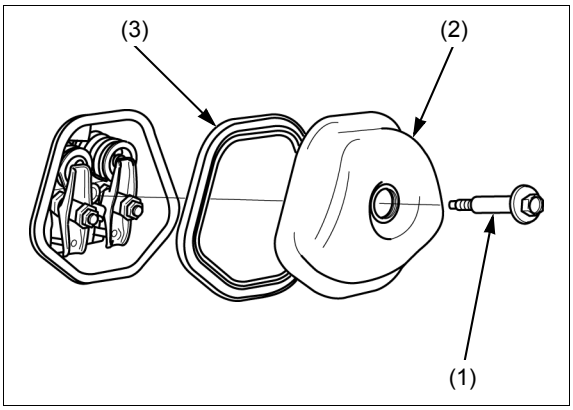

Disconnect the spark plug cap from the spark plug.

Set the piston near top dead center of the cylinder compression stroke (both valves fully closed) by pulling the recoil starter slowly. When the piston is near top dead center of the compression stroke, the triangle mark (1) on the starter pulley (2) will align with the projection (3) on the fan cover (4).

If the exhaust valve is opened, use the recoil starter to turn the crankshaft one additional turn and align the triangle mark on the starter pulley with the projection on the fan cover again.

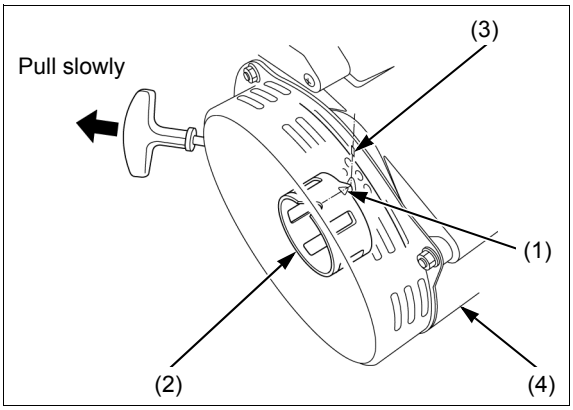

Insert a thickness gauge (1) between the valve rocker arm (2) and valve stem (3) to measure the valve clearance.

VALVE CLEARANCE:
IN: 0.15 ± 0.02 mm
EX: 0.20 ± 0.02 mm

If adjustment is necessary, refer to page 3-4.

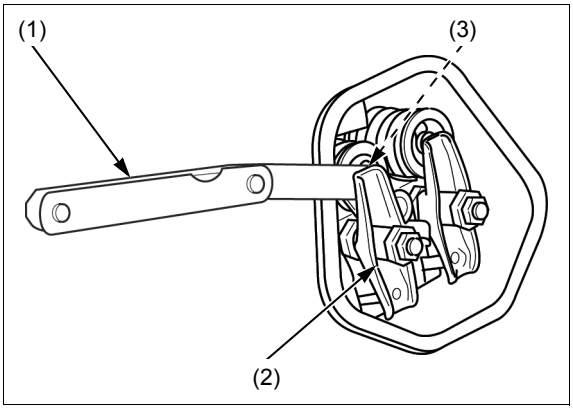

Hold the rocker arm pivot (1) and loosen the pivot adjusting nut (2).

Turn the rocker arm pivot to obtain the specified clearance.

VALVE CLEARANCE:
IN: 0.15 ± 0.02 mm
EX: 0.20 ± 0.02 mm

Hold the rocker arm pivot and retighten the pivot adjusting nut to the specified torque.

TORQUE: 10 N·m (1.0 kgf·m, 7 lbf·ft)

Recheck the valve clearance, and if necessary, readjust the clearance.

Check the head cover packing for damage or deterioration, and install it to the head cover.

Attach the cylinder head cover to the cylinder head, and tighten the head cover bolt securely.

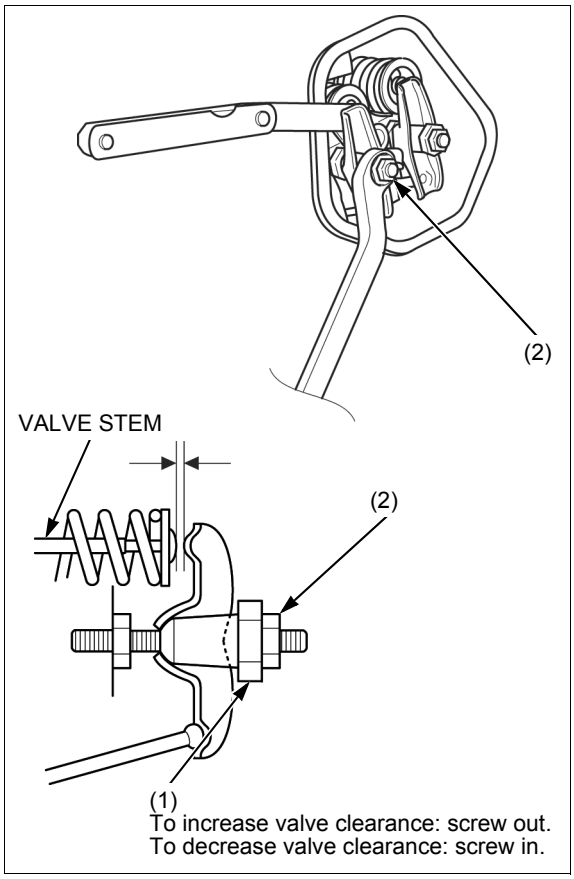

COMBUSTION CHAMBER CLEANING

Remove the cylinder head (page 13-2).

Clean any carbon deposits from the combustion chamber (1).

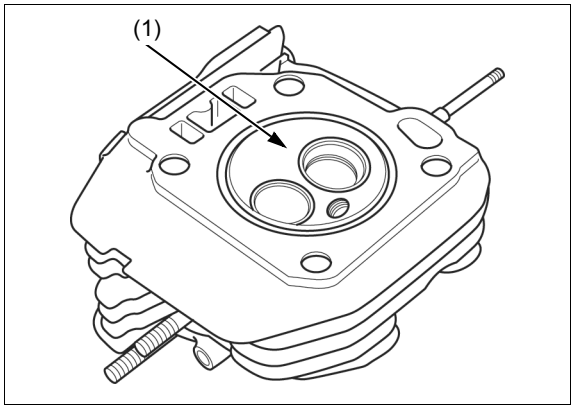

FUEL TUBE CHECK

⚠ WARNING

Gasoline is highly flammable and explosive. You can be burned or seriously injured when handling fuel.
- Keep heat, sparks, and flame away.
- Handle fuel only outdoors.
- Wipe up spills immediately.

Remove the harness cover (1) (page 6-2).

Check the fuel tube (2) for deterioration, cracks, or signs of leakage.

Install the harness cover (page 6-2).